MA.RI.NA. GT 50 S 3V

POS.	CODICE	I	F	D	GB	E	QTA'
301	CP026332	VITE AUTOF.	VIS	SCHRAUBE	SCREW	TORNILLO	1
302	CP025040	VITE AUTOF.	VIS	SCHRAUBE	SCREW	TORNILLO	2
303	CP026016	VITE AUTOF.	VIS	SCHRAUBE	SCREW	TORNILLO	1
304	CP030620	VITE TE	VIS	SCHRAUBE	SCREW	TORNILLO	1
305	CP030640	VITE TE	VIS	SCHRAUBE	SCREW	TORNILLO	1
306	CP030825	VITE TE	VIS	SCHRAUBE	SCREW	TORNILLO	1
307	CP032906	RONDELLA	RONDELLE	SCHEIBE	WASHER	ARANDELA	1
308	CP032909	RONDELLA	RONDELLE	SCHEIBE	WASHER	ARANDELA	1
309	CP032910	RONDELLA	RONDELLE	SCHEIBE	WASHER	ARANDELA	9
310	CP035805	RASAMENTO	RONDELLE	SCHEIBE	WASHER	ARANDELA	1
311	CP044708	DADO	ÉCROU	MUTTER	KNOB	ESPARRAGO	1
312	CP045525	SPINA	GOUPILLE	DORN	PIN	PASADOR	1
313	CP045810	GRANO	VIS	SCHRAUBE	SCREW	TORNILLO	1
314	CP045906	MOLLA A TAZZA	RONDELLE	SCHEIBE	WASHER	MUELLE	1
315	CP046810	SEEGER	SEEGER	RUCKHALT	RETAINER	ANILLO CLIP	1
316	CP047250	COMANDO ACCELERATO	LEVIER	STANGE	THROTTLE LEVER	LEVA	1
317	CP047834	CINGHIA Z 34 1/4 (OPT.)	COURROIE	RIEMEN	BELT	CORREA	1
318	CP050068	LEVA INNESTO	LEVIER EMBRAYAGE	STANGE	LEVER CLUTCH	LEVA	1
319	CP050143	CAVO ACCELERATORE	CABLE GAZ	BESCHLEUNIGER	THROTTLE CABLE	ACELERADOR	1
320	CP053711	DECALCO	DECALQUE	ETIKETTE	DECAL	CARTEL	1
321	CP056090	CAMBIO A 3 VELOCITA'	REDUCTEUR	UNTERSETZUNGGETRIE	GEAR BOX 3 SPEED	TRANSMISION	1
322	CP050096	COPRICINGHIA	COUVERCLE COURROIE	RIEMENSCHUTZ	BELT COVER	TAPA	1
323	CP056138	CAVO SEMOVENZA	CABLE D'EMBRAYAGE	SELBSTBEWEGLICHKABI	CABLE CLUTCH	CABLE TRACCION	1
324	CP056154	CAVO CAMBIO	CABLE	KABEL	CABLE	CABLE	1
325	CP050195	MOLLA	RESSORT	FEDER	SPRING	MUELLE	1
326	CP056225	SCATOLA	BOITE	GETRIEBE	GEAR BOX	CAJA	1
327	CP056238	RONDELLA	RONDELLE	SCHEIBE	WASHER	ARANDELA	1
328	CP056247	LEVA	LEVIER	STANGE	LEVER	LEVA	1
329	CP056249	SQUADRETTA	EQUARRE	WINKELMASS	BRACKET	ABRAZDERA	1
330	CP056250	COMANDO VARIATORE	MANETTE	STANGE	LEVER	LEVA	1
331	CP056261	PULEGGIA RIDUTTORE	POULIE	RIEMENSCHEIBE	PULLEY	POLEA	1
332	CP056262	PULEGGIA Ø 88	POULIE Ø 88	RIEMENSCHEIBE Ø 88	PULLEY Ø 88	POLEA Ø 88	1
333	CP058260	PULEGGIA TENDICINGHIA	POULIE	RIEMENSCHEIBE	PULLEY	POLEA	1
334	CP046730	SEEGER	SEEGER	RUCKHALT	RETAINER	ANILLO CLIP	1
335	CP038030	CUSCINETTO	ROULEMENT	KUGELLAGER	BALL BEARING	COJINETE	1

GT 50 S 3 V

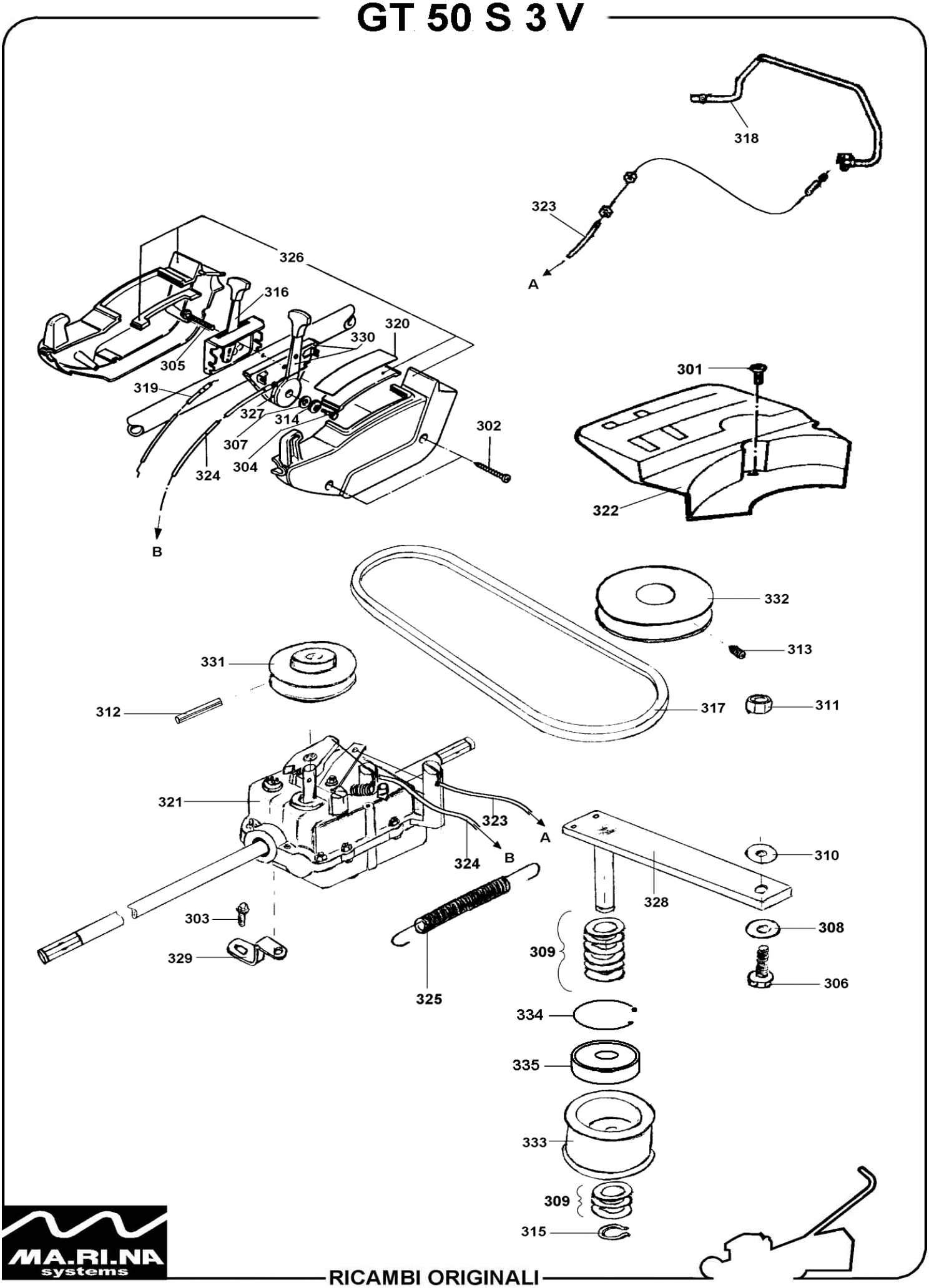

MA.RI.NA systems

RICAMBI ORIGINALI